

Bases

14.1171 - **L3D 16-Base SK Connect 16 QS**



00.5174-B 2024-03-01

Rehadapt GmbH
Heinrich-Hertz-Str. 104
34123 Kassel, Germany
Tel.: +49 561 220 717 0
Fax: +49 561 220 717 99
officeteam@rehadapt.com
https://rehadapt.com

Rehadapt North America
40 Oser Ave, Suite 40-01
Hauppauge, NY 11788
Tel.: 1 (888) 635-6962
Fax: 1 (888) 635-6962
officeteam.na@rehadapt.com
https://rehadapt.com

MOUNTING MADE EASY

Scan me

1x

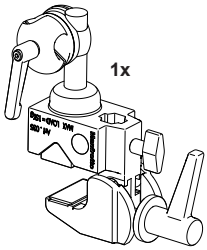

1x 01.0385
M6x40

1x 01.0014
5 mm

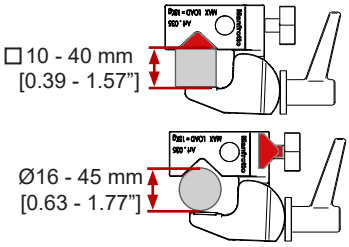

1

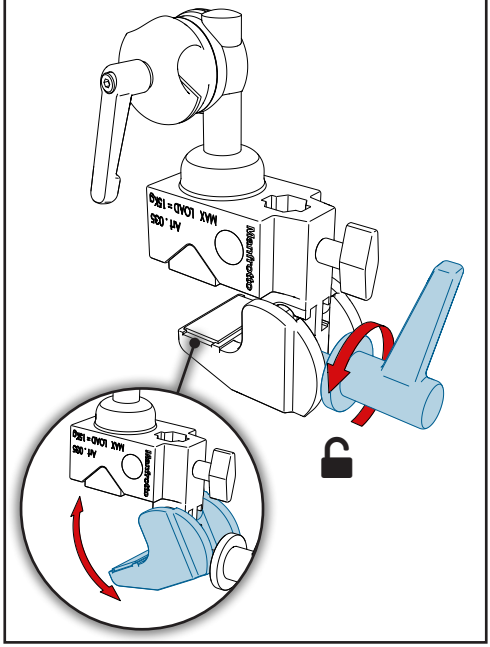

2

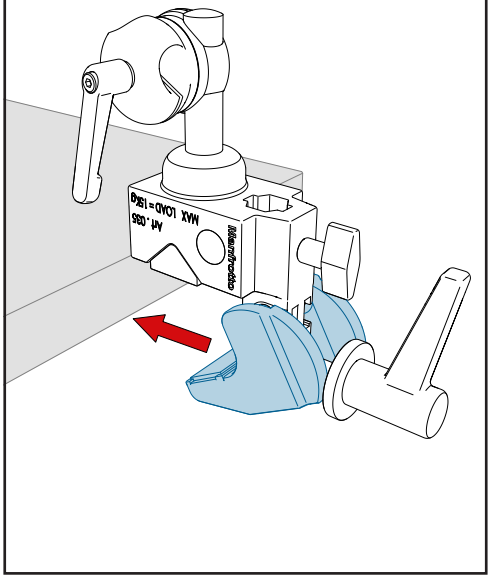

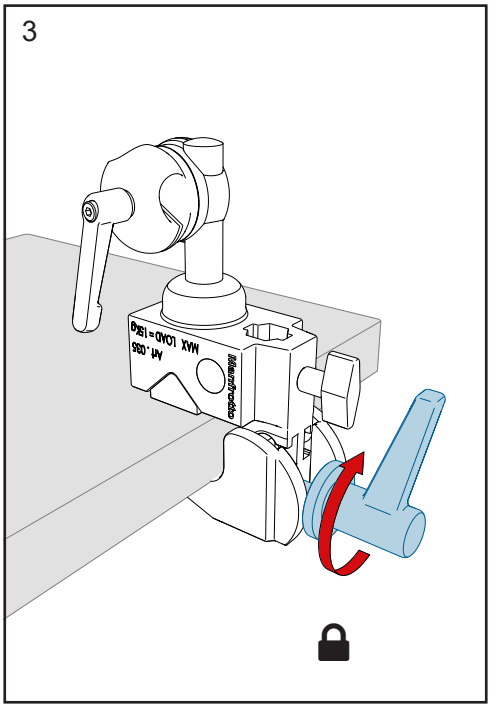
3
Art. 035
MAX LOAD = 15kg
Manfrotto

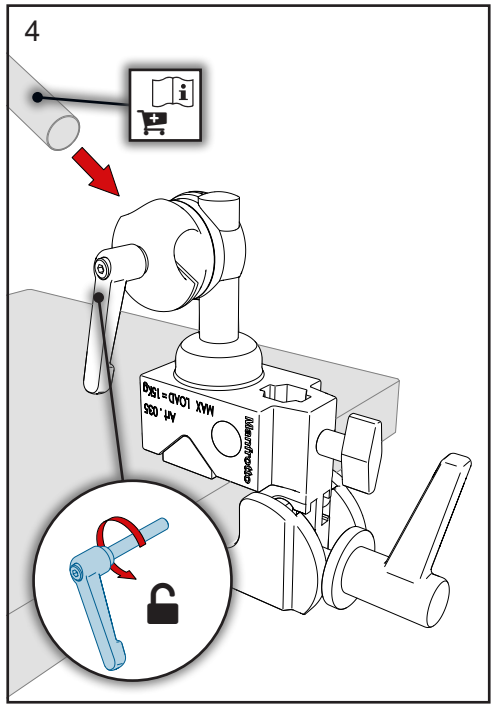
4
Art. 035
MAX LOAD = 15kg
Manfrotto

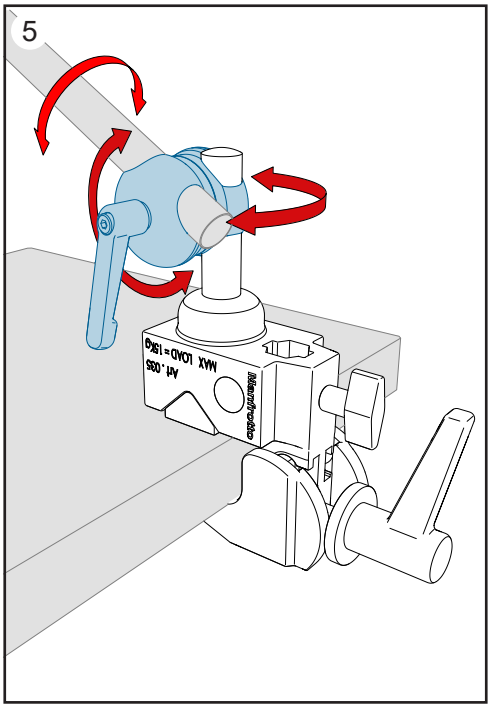
5
Art. 035
MAX LOAD = 15kg
Manfrotto

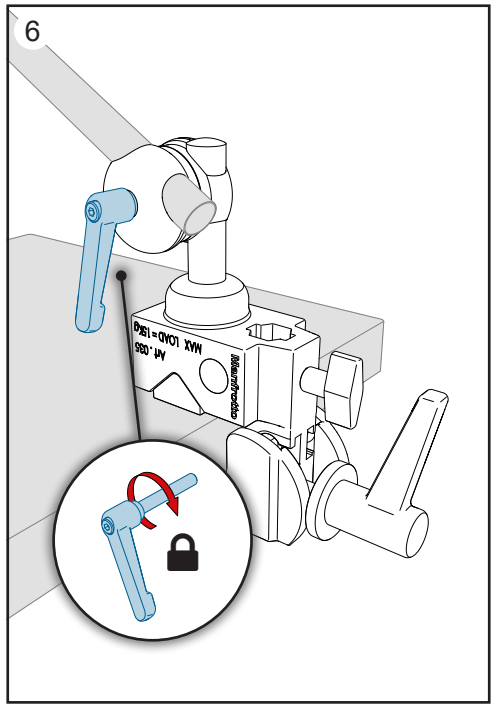
6
Art. 035
MAX LOAD = 15kg
Manfrotto

Function / Funktion

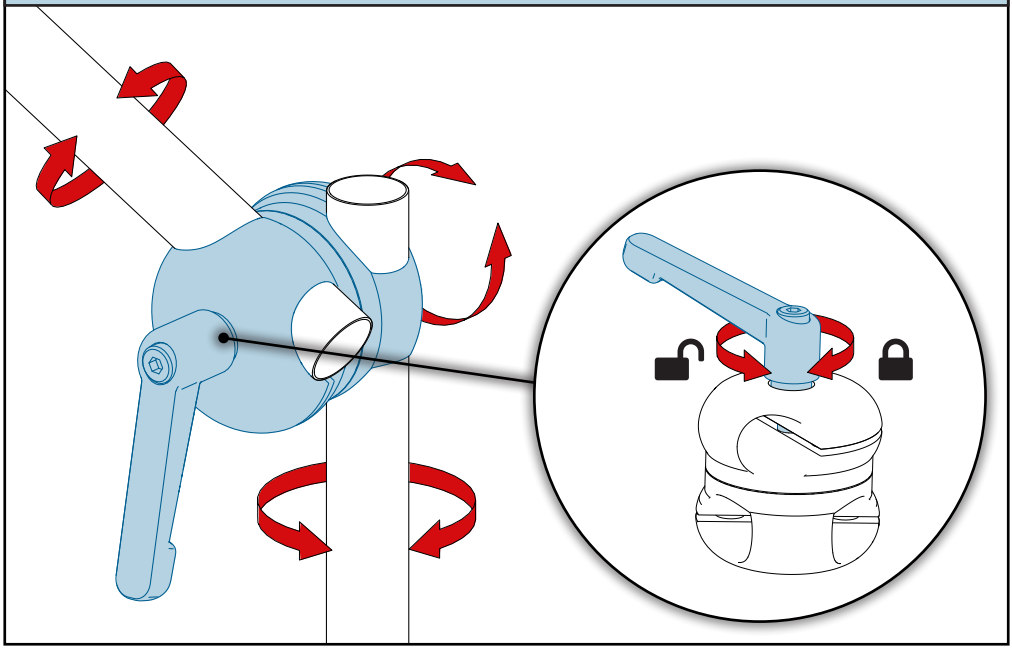

Function / Funktion

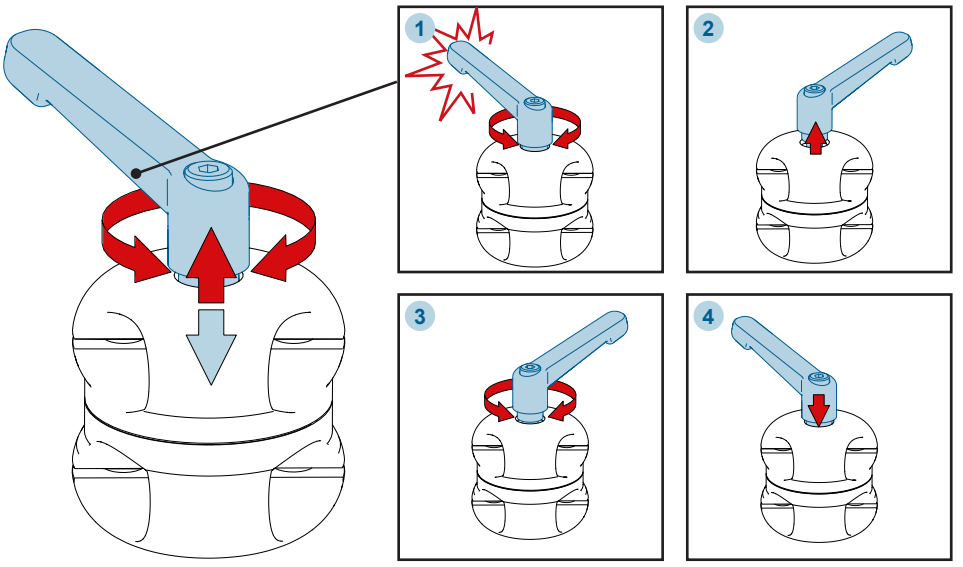

Replacement / Austausch

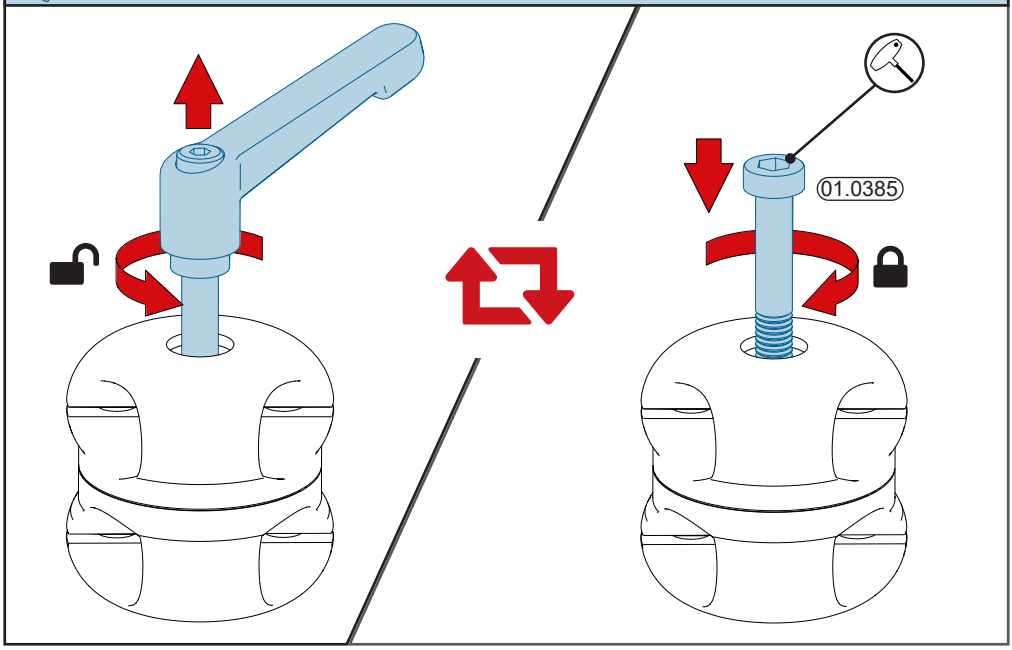

Function / Funktion

