

Table Clamp

- 12.1785 - **TC L3D 3 QS UDS**

MOUNTING MADE EASY

Scan me

00.5156-B 2024-08-01



Sicherheitshinweise
Safety Instructions

Montage
Assembly

Handhabung
Handling

Stückliste
Bill of Materials

CAUTION / VORSICHT

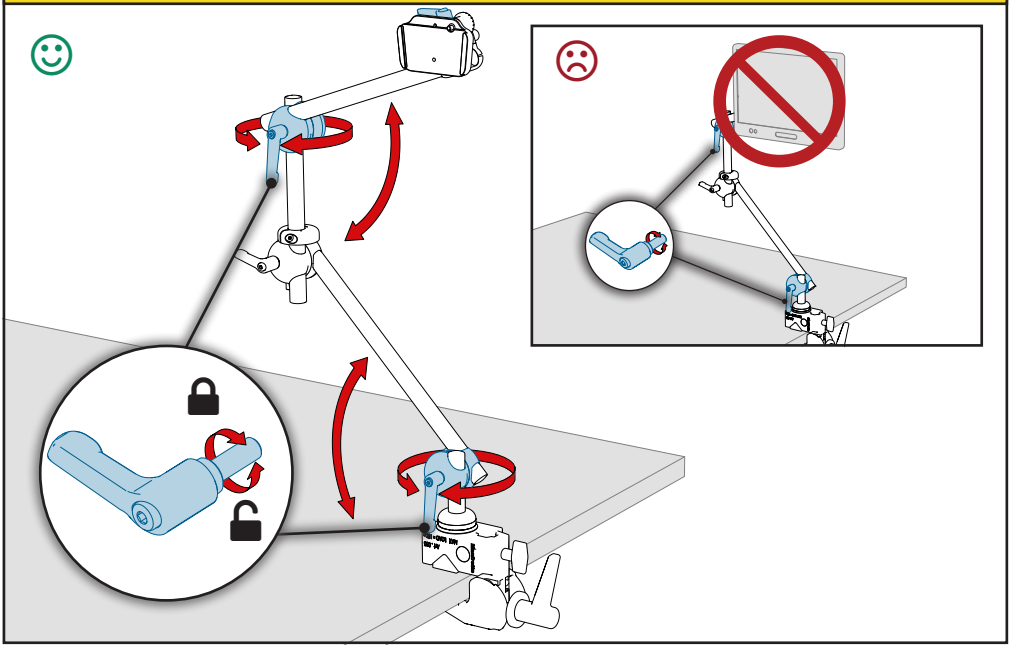



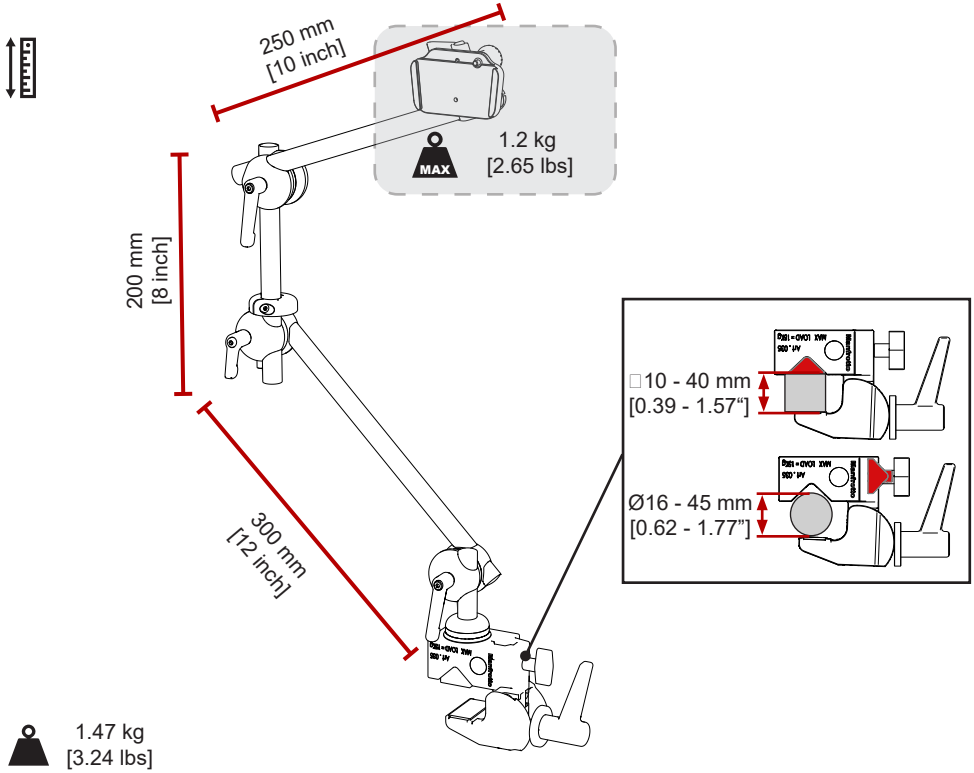
250 mm
[10 inch]
MAX
1.2 kg
[2.65 lbs]
200 mm
[8 inch]
300 mm
[12 inch]
10 - 40 mm
[0.39 - 1.57"]
Ø16 - 45 mm
[0.62 - 1.77"]
1.47 kg
[3.24 lbs]

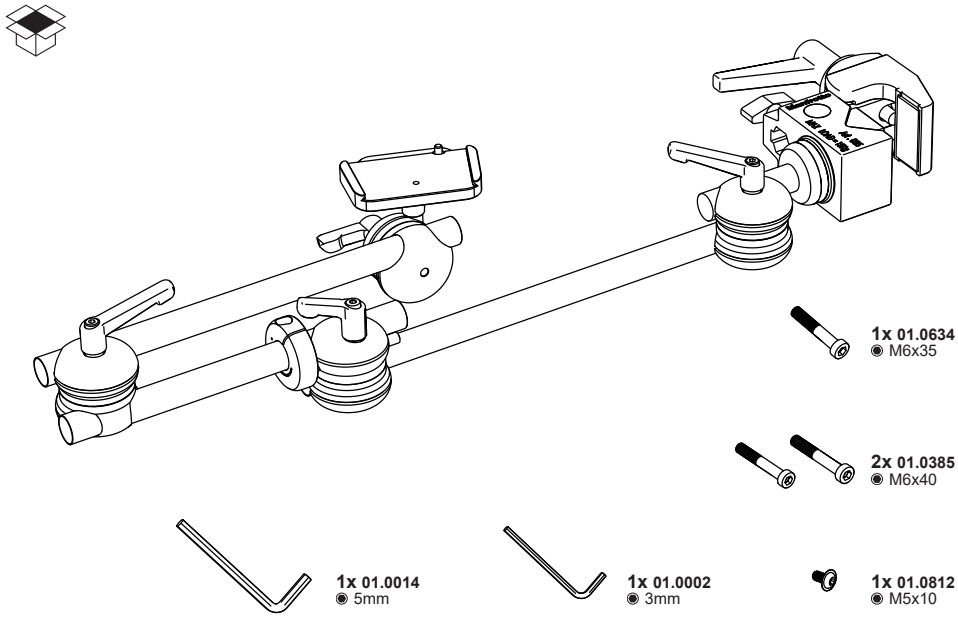
1x 01.0634
M6x35
2x 01.0385
M6x40
1x 01.0014
5mm
1x 01.0002
3mm
1x 01.0812
M5x10

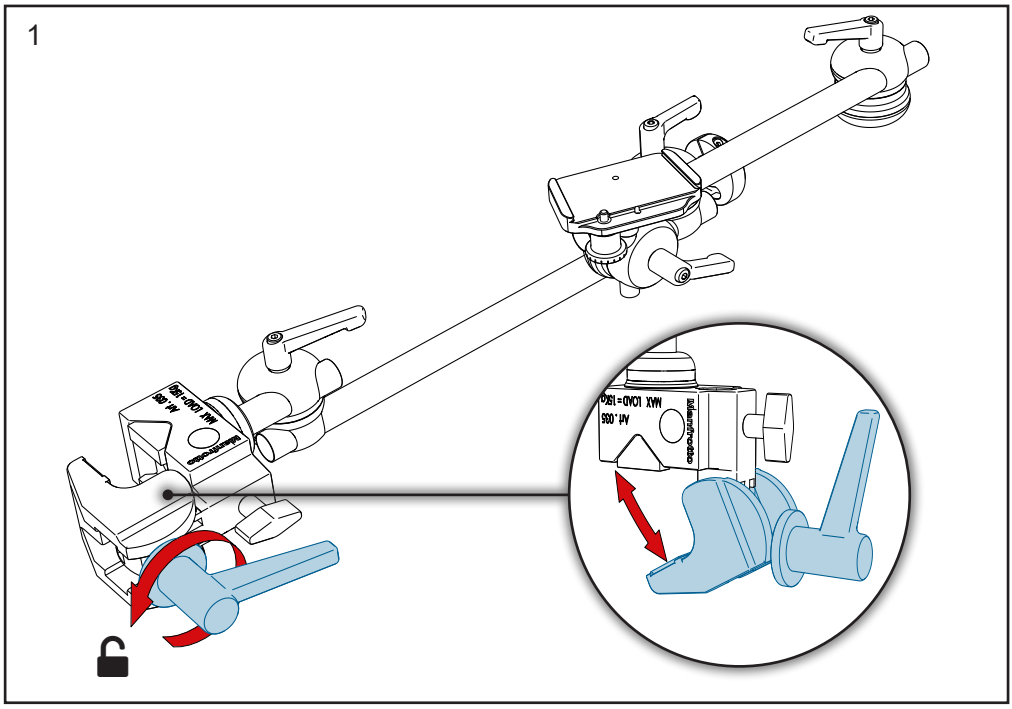
1
Art. 035
MAX LOAD = 15Kg
Art. 035
MAX LOAD = 15Kg

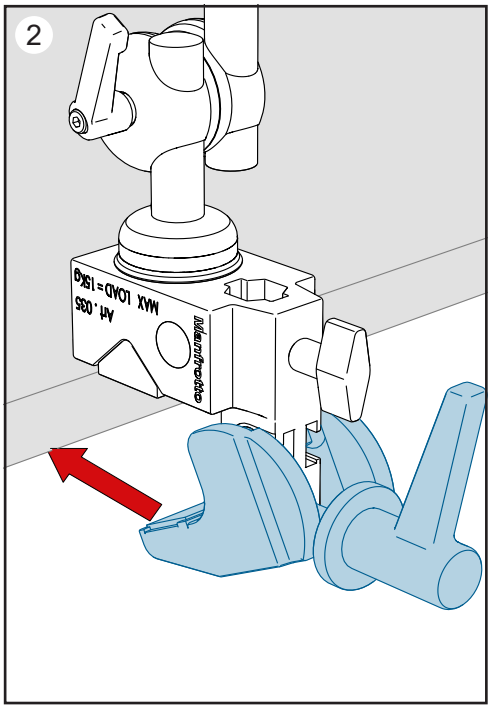
2
Art. 035
MAX LOAD = 15Kg

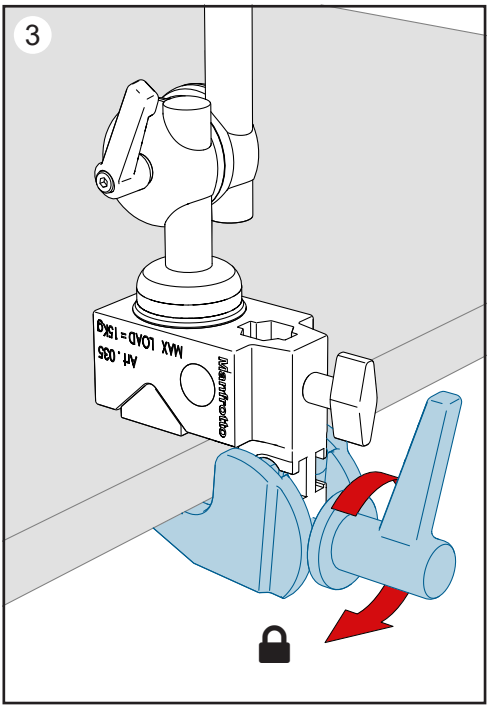
3
Art. 035
MAX LOAD = 15Kg

4

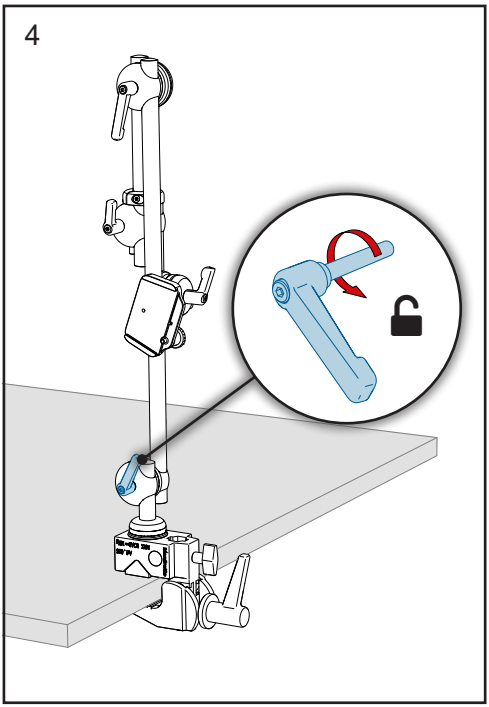

5

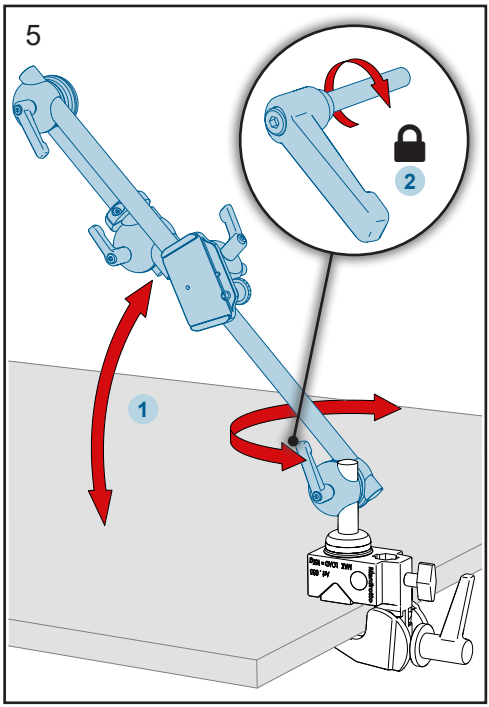

6

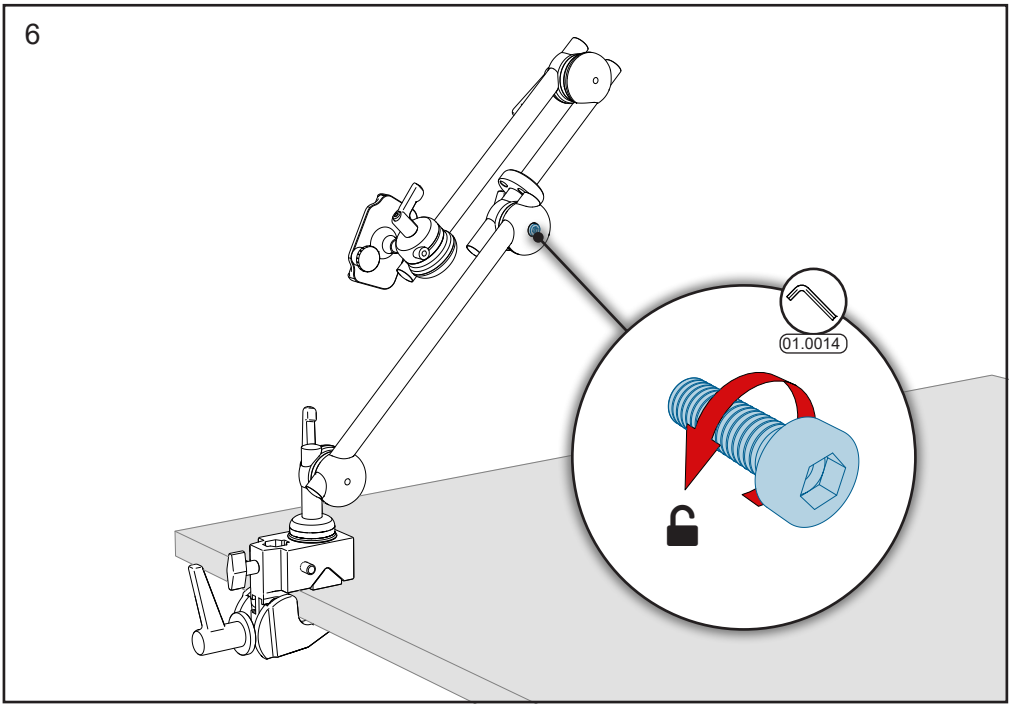

7

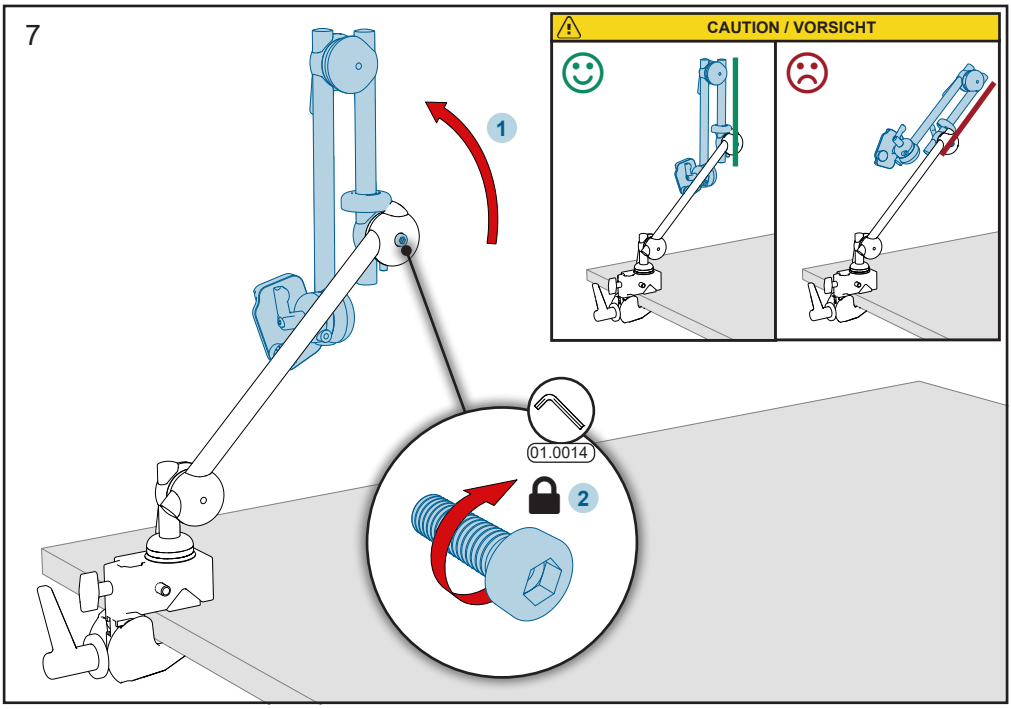

8

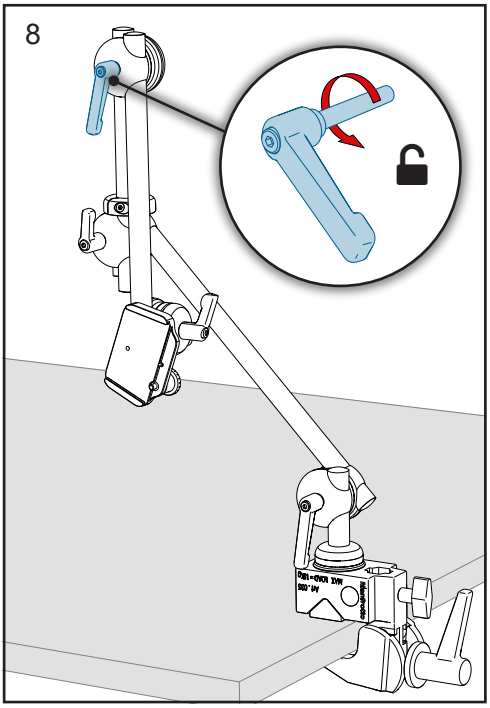

9

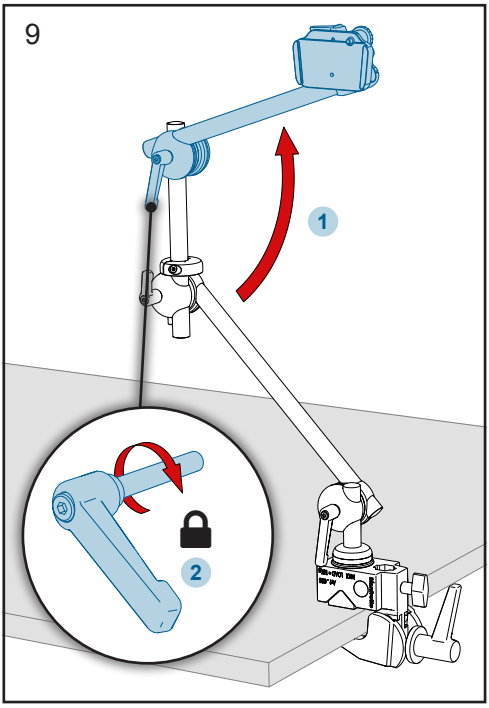

Operating / Bedienung

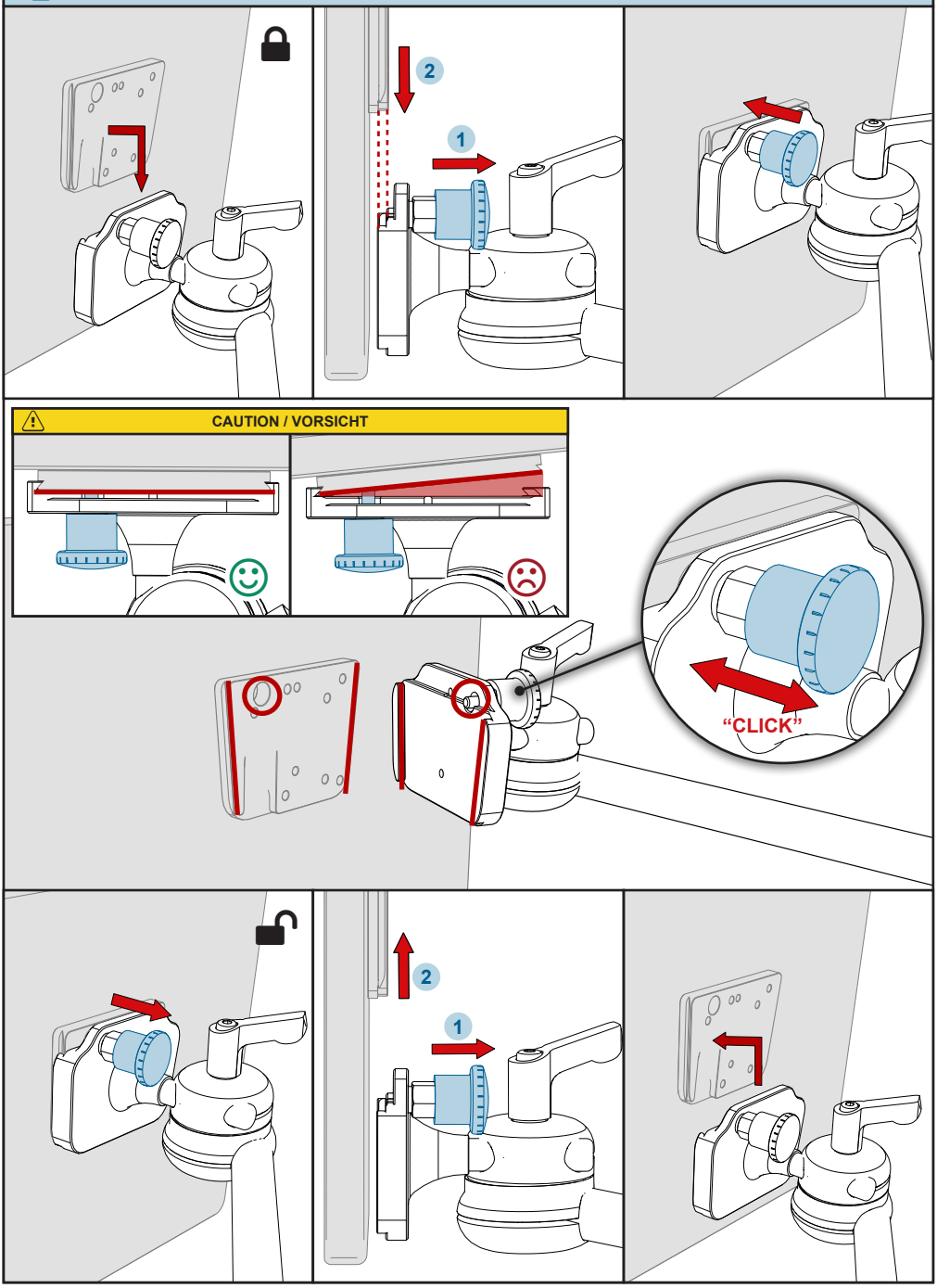

Operating / Bedienung

Operating ➔ Exiting

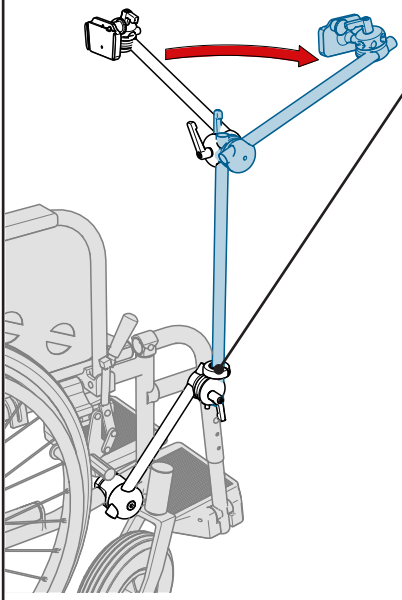

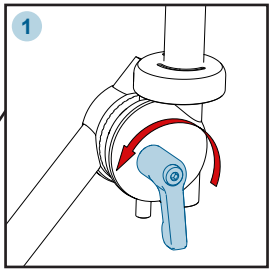

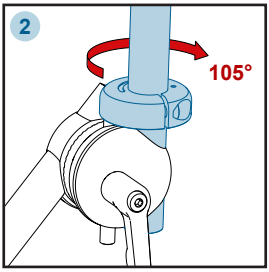

Information

right side mounting

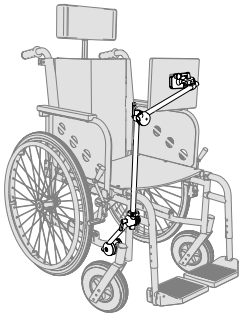

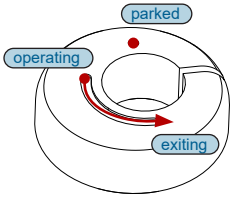

Exiting ➔ Parked

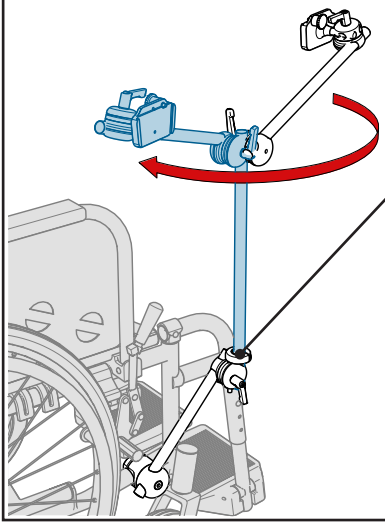

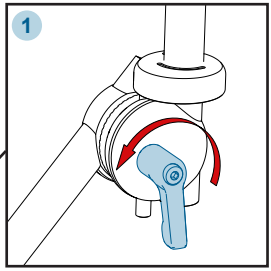

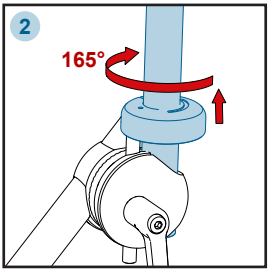

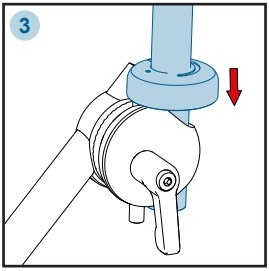

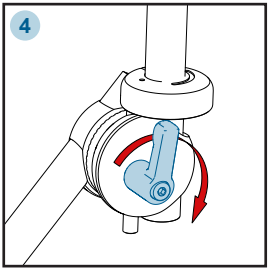

Operating / Bedienung

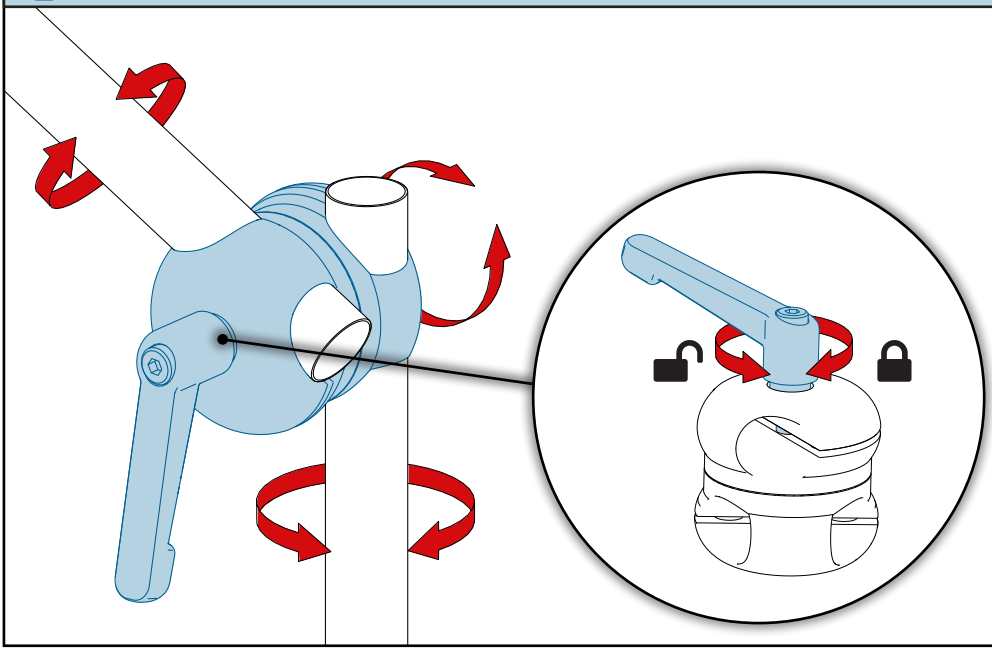

Function / Funktion

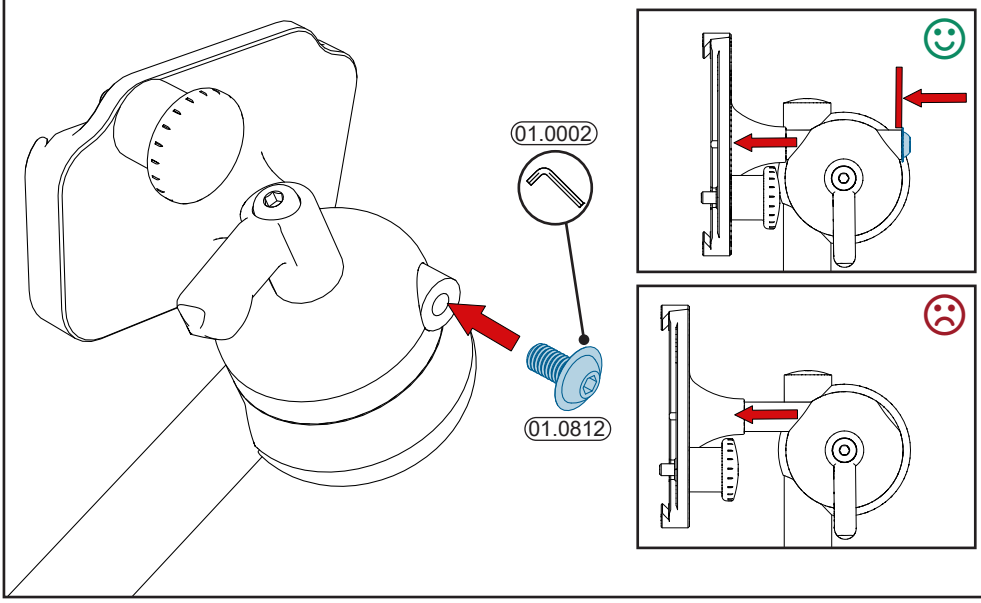

Function / Funktion

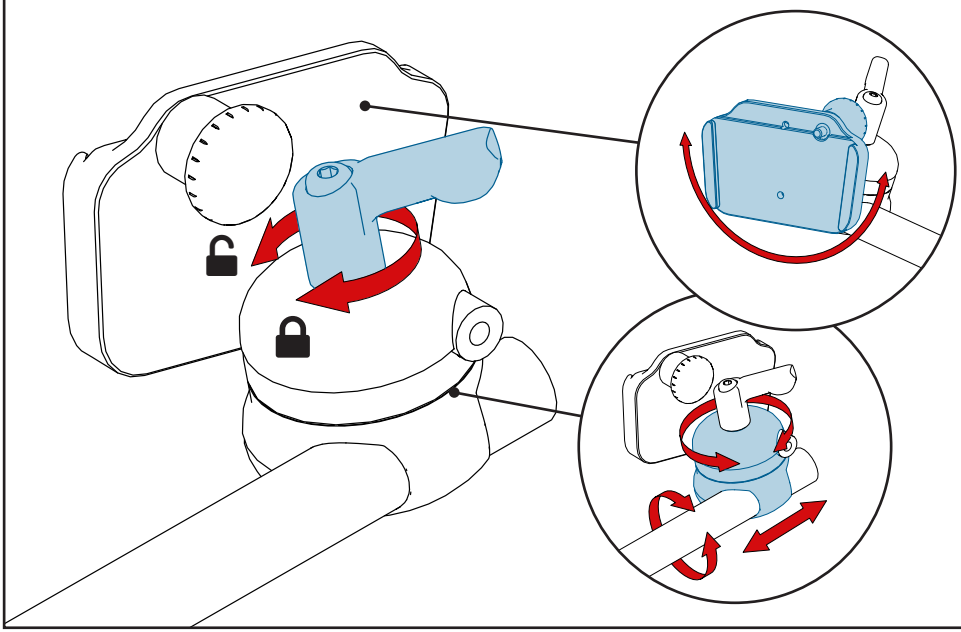

Function / Funktion

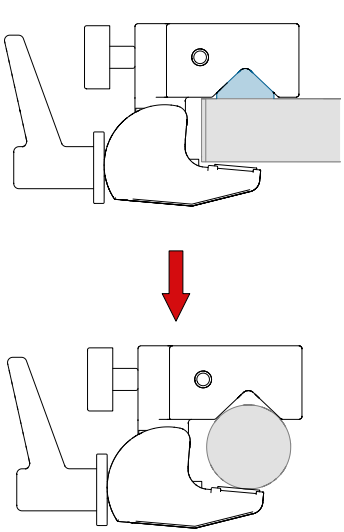

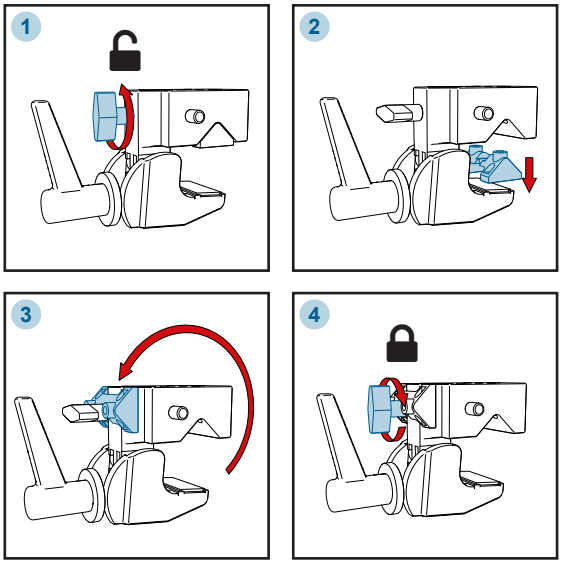

Function / Funktion

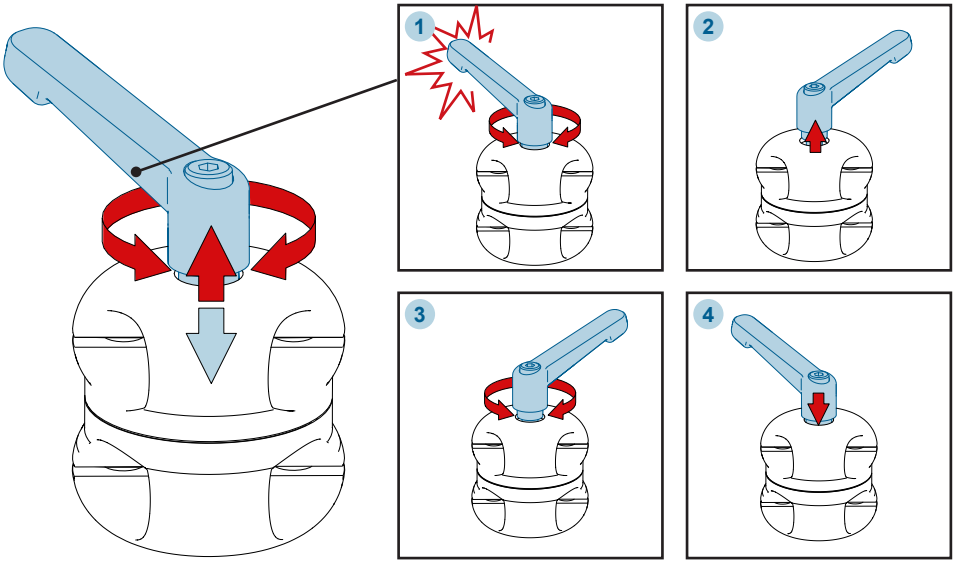

Replacement / Austausch

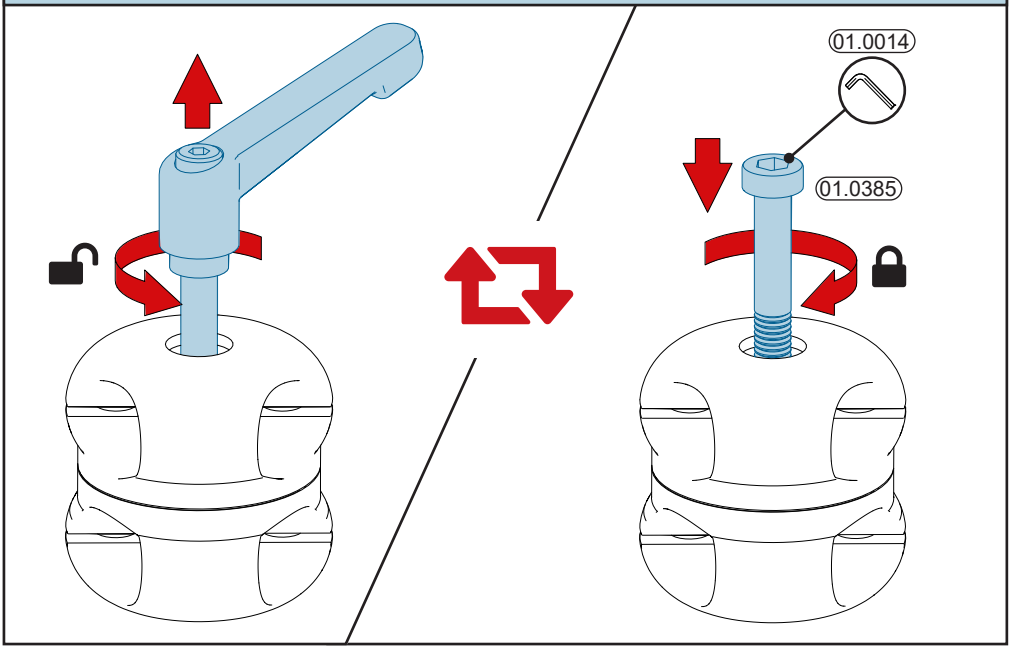

Replacement / Austausch

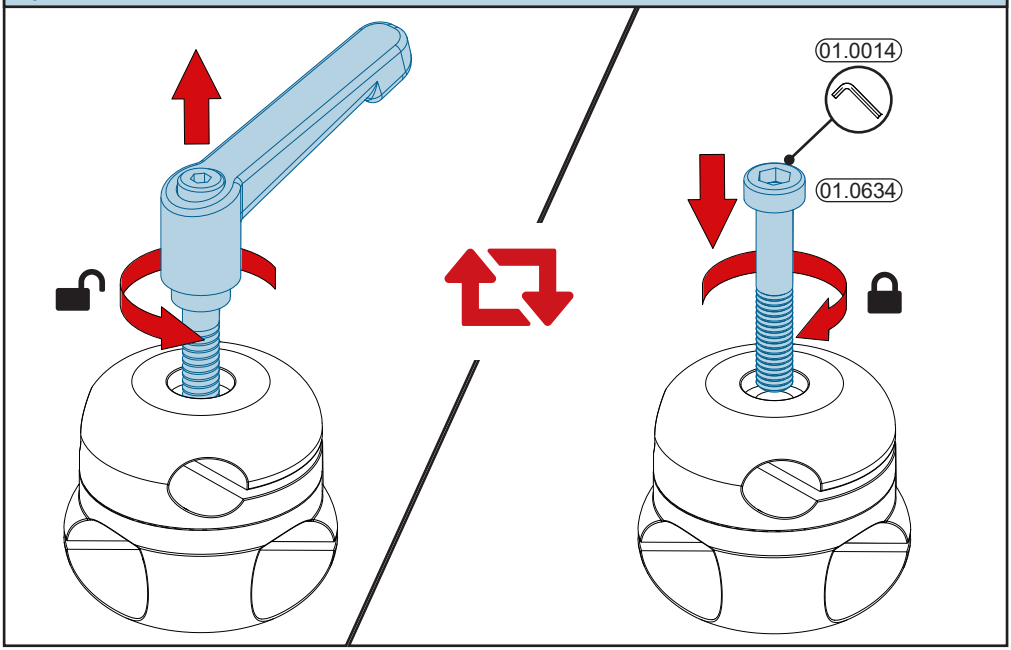

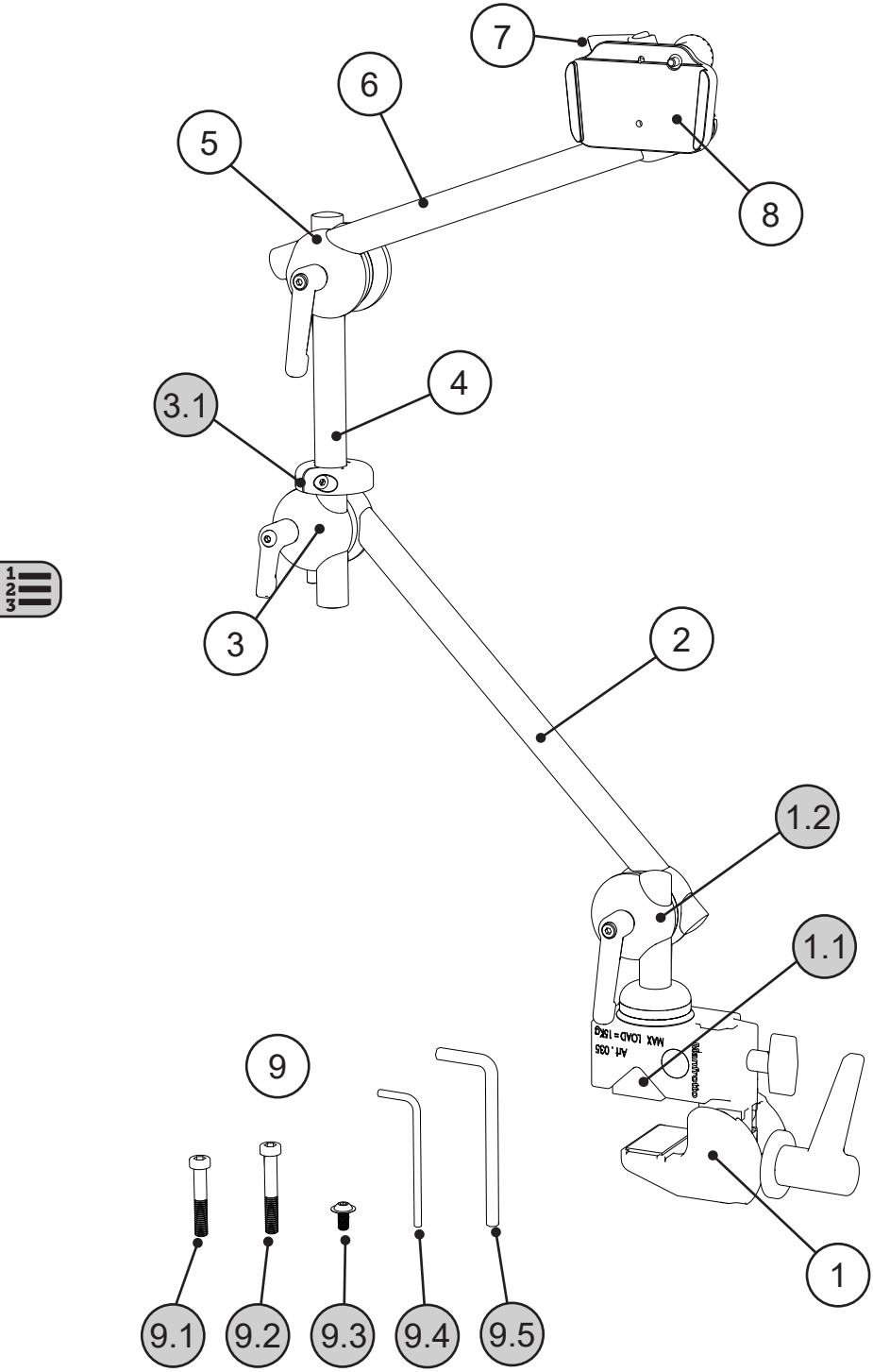
7
6
5
8
4
3.1
3
2
1.2
1.1
1
9
9.1
9.2
9.3
9.4
9.5

Pos.	No.	Bezeichnung	Description
1	14.1171	L3D 16-Basis SK Connect 16 QS	L3D 16-Base SK Connect 16 QS
1.1	01.0999	Kunststoffkeil für SuperClamp	Plastic wedge for the SuperClamp
1.2	14.1250	L3D 16-16 QS	L3D 16-16 QS
2	14.9504	Rohr Ø16x300	Tube Ø16x300
3	14.1220	L3D Schwenklager-S	L3D Swivel Unit S
3.1	14.1225	L3D Rast-Slot	L3D Indexing-Slot
4	14.9502	Rohr Ø16x200	Tube Ø16x200
5	14.1250	L3D 16-16 QS	L3D 16-16 QS
6	14.9503	Rohr Ø16x250	Tube Ø16x250
7	14.1271	L3D 16-10 SQS	L3D 16-10 SQS
8	14.1516	L3D UGA	L3D UDS
9		Schraubensatz - TC L3D UGA	Set of bolts - TC L3D UDS
9.1	01.0634	Zylinderschraube M6x35	Cylinder head bolt M6x35
9.2	01.0385	Zylinderschraube M6x40	Cylinder head bolt M6x40
9.3	01.0812	Linsenschraube M5x10	Button head bolt M5x10
9.4	01.0002	Innensechskantschlüssel 3mm	Allen wrench 3mm
9.5	01.0014	Innensechskantschlüssel 5mm	Allen wrench 5mm

We ♥ your feedback

Rehadapt GmbH

Heinrich-Hertz-Str. 104
34123 Kassel, Germany

Tel.: +49 561 220 717 0
Fax: +49 561 220 717 99

officeteam@rehadapt.com
https://rehadapt.com

Rehadapt
North America

40 Oser Ave, Suite 40-01
Hauppauge, NY 11788

Tel.: 1 (888) 635-6962
Fax: 1 (888) 635-6962

officeteam.na@rehadapt.com
https://rehadapt.com